	Stardard Reservoirs, Volume in cubic inches		
	80	160	250
A	8.00	8.00	10.00
B	3.31	3.31	4.31
C	6.63	6.63	7.63
D	8.00	8.00	9.00
E	1.63	1.63	2.50
F	4.00	4.00	6.00
G	10.75	16.50	12.75

Star Hydraulics, LLC
Two Speed Hand Pump
with Reservoir and
Special High Pressure
Port
Model CP04

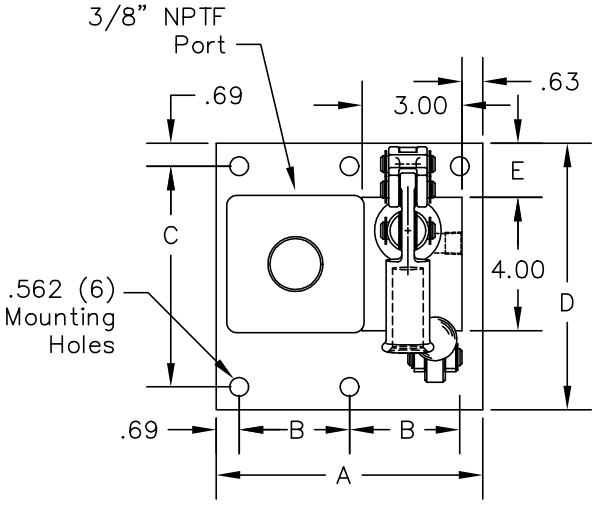

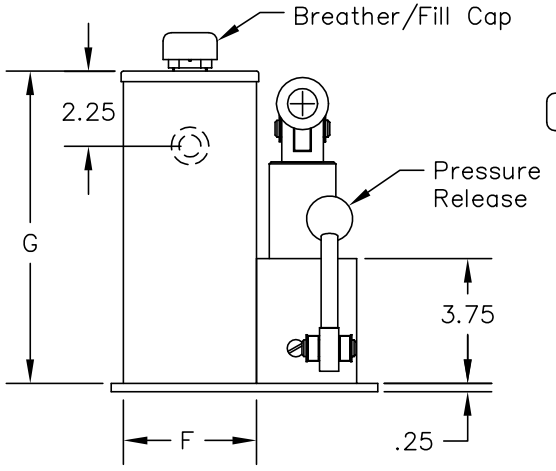

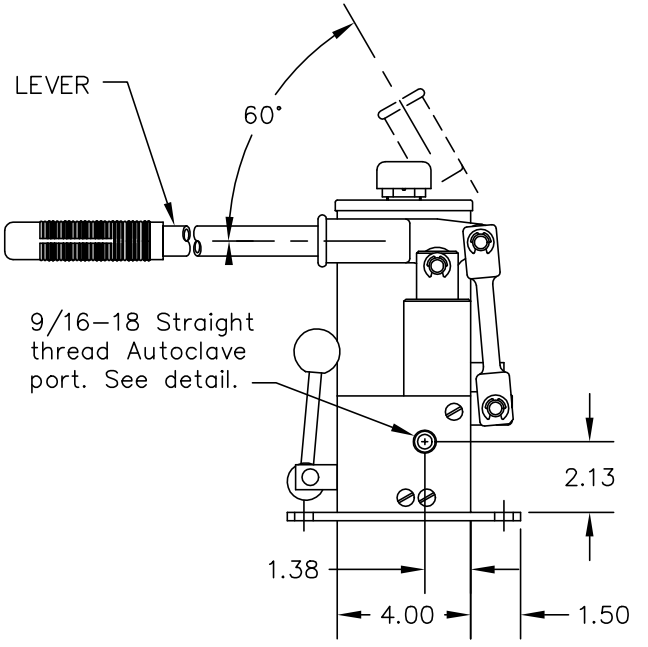

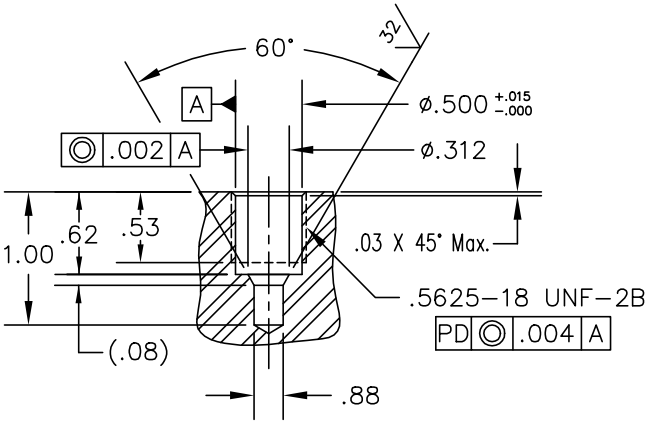

Pressure Port